iCentral™
Intelligent Central Systems
A DIVISION OF NEAT CORPORATION

SYSTEM ONE™

iCentral System One Music/Video/Intercom system.

M200/M250 Installation Manual

Products covered

System One
M250 Traditional Master
M200 Compact Master

System One
D200 Door Stations
Video & Non-Video

System One
Alloy Video Door
Station

System One
R200 Room Stations

System One
K200 Desktop Stations

M200 Manual Rev4.1B

iCentral™

Intelligent Central Systems

web: www.icentralsystems.com.au
email: sales@icentralsystems.com.au

Sales, Service, Spares consumer enquiries 1300 050 333

M200 Installation Manual Rev4.1B
Document Part No. 890-435

NESS CORPORATION

Certified System
Quality
ISO 9001
NSW Head Office only

iCENTRAL TRADE & DEALER ENQUIRIES
HEAD OFFICE
Ness Corporation Pty Ltd
ABN 28 069 984 372
Ph +61 2 8825 9222 Fax +61 2 9674 2520
ness@ness.com.au

www.ness.com.au

MADE IN AUSTRALIA

Note: DAB+ digital radio broadcasts may not be available in all areas.

COPYRIGHT NOTICE
All rights reserved. No part of this publication may be reproduced, transmitted or stored in a retrieval system in any form or by any means, electronic, mechanical, photocopying, recording, or otherwise, without the prior written permission of Ness.
Ness reserves the right to make changes to features and specifications at any time without prior notification in the interest of ongoing product development and improvement.
© 2026 Ness Corporation ABN 28 069 984 372

Table Of Contents

INTRODUCTION 1

GENERAL INFORMATION 1

LOCATION OF EQUIPMENT 2
- MASTER STATION 2
- ROOM STATIONS 2
- DOOR/GATE STATION(S) 3
- POWER SUPPLY 3
- AM AND FM ANTENNAS 3
- DAB+ / FM ANTENNA 3
- AUXILIARY INPUT JACKS 4
- AUXILIARY/LOCK OUTPUT BOARD 4

CABLING 5
- WHERE TO RUN CABLES 5
- CABLE TYPE AND CONFIGURATION 5
- MAXIMUM LENGTH FOR CABLE RUNS 6
- CABLE COLOUR CODING 6
- MASTER TO ROOMS 7
- MASTER TO DOORS 7
- POWER SUPPLY 7
- AM AERIAL 8
- FM ANTENNA 8
- DAB+ / FM ANTENNA 8
- AUXILIARY INPUT JACKS (OPTIONAL) 9
- AUXILIARY OUTPUT BOARDS (OPTIONAL 9
- BLOCK DIAGRAMS 10

INSTALLATION 12
- INSTALLATION OF M200 & M250 MASTER STATIONS 12
- INSTALLATION OF R200 (S1-R) ROOM STATION 16
- INSTALLATION OF K200 (S1-DT) DESKTOP STATION 17
- INSTALLATION OF D200 (S1-FD) DOOR STATION 18
- INSTALLATION OF ALLOY DOOR STATION 19
- INSTALLATION OF AUXILIARY INPUT JACKS 23
- INSTALLATION OF AUXILIARY OUTPUT BOARD 25
- INSTALLATION OF POWER SUPPLY 26

MASTER SETUP 28
- INITIAL POWER-UP 28
- ENTERING PROGRAM MODE 28
- NAVIGATING IN PROGRAM MODE 28
- GENERAL OPTIONS MENU 28
- STATION OPTIONS MENU 28
- AUDIO OPTIONS MENU 29
- VIDEO OPTIONS MENU 29

AUX1 OPTIONS MENU 30
AUX2 OPTIONS MENU 30
OTHER OPTIONS MENU 30
SYSTEM TEST MENU 30
RADIO/CLOCK ADJUSTMENT (AM/FM MODEL) 31
RADIO/CLOCK ADJUSTMENT (DAB+/FM MODEL) 32

ROOM STATION SETUP 33
ENTERING PROGRAM MODE 33
ROOM STATION CODING 33
KEYPAD BACKLIGHTING 34
VOLUME FEEDBACK TONE 34
SIX WIRE OPERATION 34

DOOR STATION SETUP 35
DOOR STATION VOLUME ADJUSTMENTS 35
CHANGING THE CHIME 35
CHIME (VOLTAGE) OUTPUT OPTIONS 36

INPUT JACK TYPE B SETUP 36

WIRELESS AUDIO TRANMITTER SETUP 37

AUXILIARY OUTPUT BOARD SETUP 38

OPTIONAL DAB+ ANTENNA SETUP 39

INTRODUCTION

The System One Home Communication System can be installed using up to 20 stations offering great flexibility.
System One provides a choice of two Master station sizes – the traditional standard size or the new compact size.
Where a Master station is not required, System One can be installed without a master using only Room and Door stations.
Up to 3 Door stations can be fitted to a system with a choice of camera, non camera or a mixture of both.
Also now available is a new compact surface mount metal Door station (with camera).
Room stations are available in either recess or surface mount versions.
Optional surface mount back boxes are available to convert recessed door stations to surface mount.
Where System One is being fitted as an upgrade for an older style System One or VALET system, optional trim plates are available for recessed room stations to cover the footprint left by older style room stations.

GENERAL INFORMATION

The following general procedures must be observed in relation to the location and installation of System One Home Communication components:

- Stations are not to be installed back to back or in line of sight of each other, as this will cause feed-back (squealing).
- Where stations are to be fitted externally, appropriate measures to provide protection from the weather are to be taken.
- Avoid running intercom cable in parallel to electrical wiring.
- The power supply should be located in an area with sufficient space for heat dissipation.
- Guidelines for maximum cable lengths as set out in this manual are to be observed to avoid the possibility of operating problems due to excessive cable voltage drop.
- The maximum number of stations on any system including the Master and Door Stations is generally limited to 20.
- It is important that the power supply is properly matched to the size of the system.
- Where a system is installed without a master, a VLC load resistor must be fitted to the room station to which the power supply is connected.

CAUTION:

Failure to use specified cable may cause problems with the performance of the system and will void warranty on the equipment.

IMPORTANT:

Responsibility will not be taken for problems that arise from the use of improper cable or interference generated externally to the system.

An aid to reducing the effects of interference is to keep intercom stations and wiring away from AC devices and AC wiring.

The circuitry of the intercom has been designed to minimize the effects of Radio Frequency Interference however total immunity to this type of interference cannot be guaranteed where the levels of interference generated are extreme.

LOCATION OF EQUIPMENT

MASTER STATION

Where a Master has been purchased as part of the system, it is generally located above the breakfast bar in the kitchen/family room at a suggested height of 1400 millimetres from the floor to the centre of the unit. As all wiring from other stations is generally terminated at the rear of the Master, the wall should be no less than 70 millimetres in depth. A timber or metal wall box should be inserted so as to allow for correct support of the Master station.

IMPORTANT:

The Master Station should be installed in a cavity wall and not a single brick wall in order to facilitate the wiring behind it.

Where there is wall tiling around or near to the Master Station, ensure the Master Station is mounted either completely within or completely clear of the tiled area so as to avoid the Master being affixed to an uneven surface.

ROOM STATIONS

Careful consideration must be given to present and/or future layout of furniture so as not to locate stations in positions that will prove to be inappropriate.

To avoid audio feedback, Room Stations should be kept at least four to five meters away from other stations. Never have more than one station in any one room and avoid mounting stations in the same wall cavity (i.e. directly below and above one another in a two-storey house).

A suitable height is generally 1400 millimetres from the floor to the centre of the unit.

Stations located on timber frame walls should be located adjacent to a stud to allow for firm fixing.

Stations located on cavity brick walls will require the installation of wall boxes.

Stations installed on single brick walls will also require wall boxes however the cable will need to be placed in conduit and chased into the brick wall. Where stations are required in bathrooms or laundries, they must be kept clear of water or steam.

Where stations are mounted on a tiled surface, a wall box should be installed prior to lining/tiling of the walls and the tiles will need to be cut to the inside dimensions of the wall box.

Where Room Stations are mounted outside and are exposed to the weather, the fitting of weatherproof covers will be required. Stations must not be installed in saunas.

DOOR/GATE STATION(S)

Door stations are best located adjacent to the front door or at the front gate at a suggested height of 1400 to 1500 millimetres and may require a wall box depending upon the surface to which they are to be affixed.
Any station exposed to the weather will require the fitting of a weatherproof cover.
Where stations are to be installed in brick or concrete columns at a front gate, the cable should be run in conduit from the station to below ground level and back to the house.
For door stations fitted with cameras, consideration must be given the viewing area of the camera taking factors such as lighting etc into account.

POWER SUPPLY

The power supply is usually located no less than 1 metre and not more than 5 metres from the Master (or from the Room Station that serves as a central connection point).
Suggested locations are kitchen cupboards, pantry, bedroom wardrobes etc.
The power supply should be located with sufficient space to dissipate heat effectively.
It is desirable to have easy access to the power supply for occasions when power to the system needs to be switched off and back on again.

AM AND FM ANTENNAS

The antenna arrangement is a critical part of the installation for quality radio reception.
The AM and FM antennas should be located in the highest point of the roof and at least 2 meters away from any electrical or intercom wiring.
Because both the AM and FM antennas are directional, experimentation with positioning is recommended to achieve the best possible result.
Where the roof is lined with foil insulation, or is of metal construction, it may be better to have the AM antenna situated externally.
FM reception can be greatly improved in poor signal areas by using a specialised outdoor FM antenna.

DAB+/FM ANTENNA

For models equipped with the DAB+/FM radio, only one antenna is required for both the DAB+ and FM signals.
The antenna is usually located in the roof space however there may be instances where better results may be achieved by using a specialised externally mounted DAB+/FM antenna.

Optional DAB+ antenna information - page 39

AUXILIARY INPUT JACKS

The Auxiliary Input Jack is an optional accessory allowing music from an external source, such as an iPod, MP3 player, CD player, tape deck, or computer, to be played throughout the intercom system.

Three different types of Input Jack are used:

1) Input Jack Type A – For use with M200 and M250 Master Stations
2) Input Jack Type B – For systems without a Master Station
3) Wireless Audio Transmitter - For use in systems with a Master

The Input Jack Type A and Type B should be installed in a wall near the location where the external music source is to be situated.

Note: An appropriate lead will be required to connect the music source to the Input Jack.

AUXILIARY/LOCK OUTPUT BOARD

The Auxiliary Output Board is an optional accessory primarily for Room Station Only systems allowing electronic door locks, automatic gates, courtesy lights, etc to be controlled from any room station.

There are 2 outputs on each board, which can be individually programmed to time out or toggle depending on the application.

The Auxiliary Output Board connects to any room station by means of a 4-way lead provided with the board

Note 1: Additional wiring is required for this feature to operate.

Note 2: M200 and M250 masters come equipped with two integrated auxiliary outputs

CABLING

WHERE TO RUN CABLES

Cables can be run:

- In the roof space
- In false ceilings/bulkhead area
- Through and/or around external walls
- Under floors (subject to access being available)
- Underground in conduit

Intercom cables should be kept as far away from AC wiring as practicality permits.

Avoid running intercom cable in parallel to AC or any other type of wiring.

Avoid having joins in the cables particularly where there will be no future access for servicing.

All antenna wires should be taken to the highest and most accessible point in the roof.

Allow additional cable at each station for the purpose of termination.
(At least 1 meter for the Master)

CABLE TYPE AND CONFIGURATION

The general intercom functions for System One can be cabled using CAT5 or VALET 8 cable.

If required, 6 core telephone cable can be used providing the system is configured for 6-wire operation.

It is preferable that the system be star wired from a central point (normally the master) however loop wiring is permitted providing the number of stations on the loop does not exceed the recommended number for the overall length of the cable run.

(See section “Maximum Length for Cable Runs”)

Clearly tagging all cables at the Master or central wiring point is strongly recommended as this can be extremely helpful in isolating damaged cables or other system faults.

MAXIMUM LENGTH FOR CABLE RUNS

The system may be "star-wired" from a central point or "loop-wired" however the number of stations on a loop-wired run governs the overall length of the run.

The table below shows the relationship between the length on a cable run and the number of stations permitted on the run.

A cable run is considered to begin at the station to which the power supply is connected.

Number of Room Stations for a given length cable run	
Max Cable Length	**No. of stations permitted**
100 metres	1 Room Station
50 metres	2 Room Stations
33 metres	3 Room Stations
25 metres	4 Room Stations

Number of Doom Stations for a given length cable run	
Max Cable Length	**No. of stations permitted**
80 metres	1 Door Station
40 metres	2 Door Stations

Note: The above charts are based the use of CAT5 or VALET 8 cable

Where required, the above maximum distances can be doubled by running a “figure 8” cable (14 x 0.2 mm) in parallel with the POS & NEG wires.

Note: It is vitally important that the POS and NEG wires are balanced in terms of the type of wire and the number of wires being used - i.e. if a Cat5 wire and a Fig 8 wire are being used for the positive connection, a Cat5 wire and a Fig 8 wire should also be used for the negative connection.

CABLE COLOUR CODING

FUNCTION	CAT5	VALET 8	TELEPHONE
POS	GREEN/WHITE	RED	RED
NEG	GREEN	BLACK	BLACK
TC	ORANGE/WHITE	SHIELDED RED (OR GREY)	GREEN
VLC	ORANGE	SHIELDED WHITE (OR YELLOW)	ORANGE
COM1	BLUE/WHITE	WHITE	WHITE
COM2	BLUE	BLUE	BLUE
MUS1	BROWN/WHITE	GREEN	N/A
MUS2	BROWN	ORANGE	N/A

Please note, that while the use of recommended colours are only of importance to maintain convention, it is important that twisted pairs are used particularly for the communication pair (COM1 and COM2) and for the music pair (MUS1 and MUS2).

MASTER TO ROOMS

Depending on the type of cable being used, rooms stations are wired as per the table above.
Where the Auxiliary function is required, this can be achieved in two ways:

1) By wiring the AUX terminal from each room to the AUX terminal at the master
   - Function is operated by pressing AUX followed function NUMBER
2) By configuring the system for double digit operation.
   - Function is operated by pressing 7 followed by function NUMBER
   * Additional wiring of AUX terminals not required using this method.

Note 1: Option 2 is only available for systems using M200 or M250 master

Note 2: Room station only systems will require an additional Auxiliary Output PCB

Note 3: If option 1 is to be used but the number of conductors available are insufficient, the system can be configured as 6-wire allowing one of the spare conductors to be used as a seventh wire for the auxiliary function.

MASTER TO DOORS

Door stations also are wired as per the table above however the MUS1 and MUS2 connections are not applicable hence only six wires are required for general door station operation
For door stations fitted with a camera, the video signal can be transmitted using either the spare Cat5 pair or a separate coaxial cable.

Note: Where a Cat5 pair is being used for the video signal, passive video baluns may be required at both ends of the cable to achieve a good video image.

POWER SUPPLY

If a power supply is being used with a standard cable already attached, any required cable extension should not be added to the end of the existing standard cable.
Where the existing cable length needs to be extended, the existing cable should be cut to a length of only 10cm.
A heavy duty "Figure 8" cable should then be properly connected to the end of the 10cm cable from the Power Supply and run to the Master (or the Room Station serving as a central connection point).
The total resistance of the power supply cable should not be greater than 0.4 divided by the total system current.

EXAMPLE: Power Supply Cable Resistance (in ohms)
$\leq 0.4 \div$ Total System Current (in amps)*

*** where the total system current = sum of the peak current of all the stations on the system**

As a guide for cable resistance, the typical return resistance of the standard wire attached to a plugpack is approximately 0.17 ohm per metre.
The typical return resistance for "24 x 0.2 Figure 8" wire is approximately 0.05 ohm per metre.

EXAMPLE: For a system with a maximum current draw of 2A, the maximum allowable power supply cable resistance is 0.2 ohm (calculated by: 0.4 divided by 2A).
The maximum length for the standard plugpack cable in the above example would be approximately 1.2 meters (calculated by: 0.2 ohm divided by 0.17 ohm).
The maximum length for "24 x 0.20 Fig 8" cable in the above example would be approximately 4 meters (calculated by: 0.2 ohm divided by 0.05 ohm).

AM AERIAL

The coaxial cable supplied with the Master is fitted with a plug at one end and a socket at the other end, which allows for plugging together multiple lengths of coaxial cable for extended runs.

The plug and socket is to be cut off at both ends of the coaxial cable run for connection to the Master and the AM loop antenna.

The cable is to be run from the Master to the highest point in the roof where the loop antenna must be connected to both the inner core and the outer shield of the coaxial cable.

FM ANTENNA

The 300 ohm FM ribbon antenna supplied with the Master is to be run from the Master to the highest point in the roof.

If using coaxial cable to connect to an alternative 75 ohm antenna, be sure to fit a 300 ohm/75 ohm balun to the terminals at the Master.

DAB+/FM ANTENNA

Run coaxial cable from master to the roof space or external antenna mast.

For typical in-roof antenna, attach a one meter length wire (approximately AWG16) to the coaxial inner core and place the wire straight up suspending it to a roof timber. Attach another one meter wire to the shield wire and place the wire straight down. Then make a U and attach the end of the wire to the insulation of the coax as shown below.

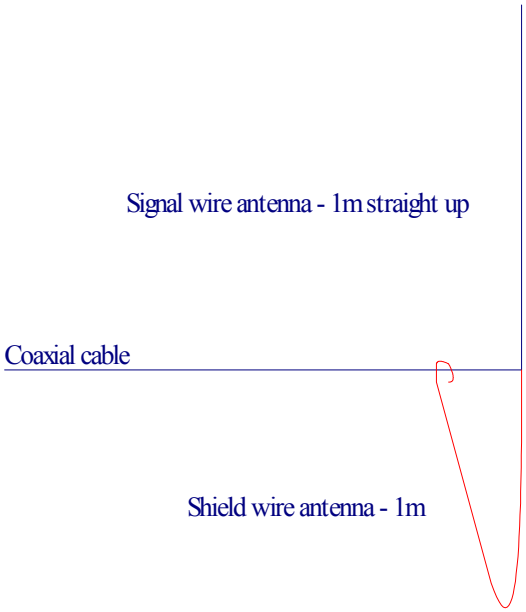

AUXILIARY INPUT JACKS (OPTIONAL)

Three different Input Jacks are available:

Wireless Audio Transmitter

- Can only be used on systems incorporating a master station
- No cabling required between the master and the input jack

Input Jack 'Type A'

- For use with systems using the M200 or M250 master station
- Run 1pair shielded audio cable from the Input Jack to the master station

Input Jack Type 'B'

- For use with "Room Station Only" systems
  (Can also be used for earlier systems using the VM102 or S1-M masters)
- Run 3 pair cable (or same wire as used for intercom wiring) from the Input Jack to the master (or the room station serving as the central connection point).

AUXILIARY OUTPUT BOARDS (OPTIONAL)

An additional hook-up wire (13 x 0.13 or similar) is required to connect the AUX terminal of all Room Stations.

Note: If 8 core cable is being used, the system can be configured for 6-wire operation allowing one of the wires from the spare pair to be used instead of the addition hook-up mentioned wire above.

Heavy duty "Figure 8" cable is to be run from the power source (via the auxiliary relay contacts) to the applicable auxiliary device.

To minimise cable voltage drop to the auxiliary device, the total resistance of the cable connecting the auxiliary device to the power source, (via the auxiliary board relay), should be approximately 1/10 the resistance of the load represented by the auxiliary device itself.

Note: As the M200 and M250 masters come equipped with two integrated auxiliary outputs, this optional board is intended primarily for room station only systems.

BLOCK DIAGRAMS

BLOCK DIAGRAM FOR SYSTEM WITH MASTER

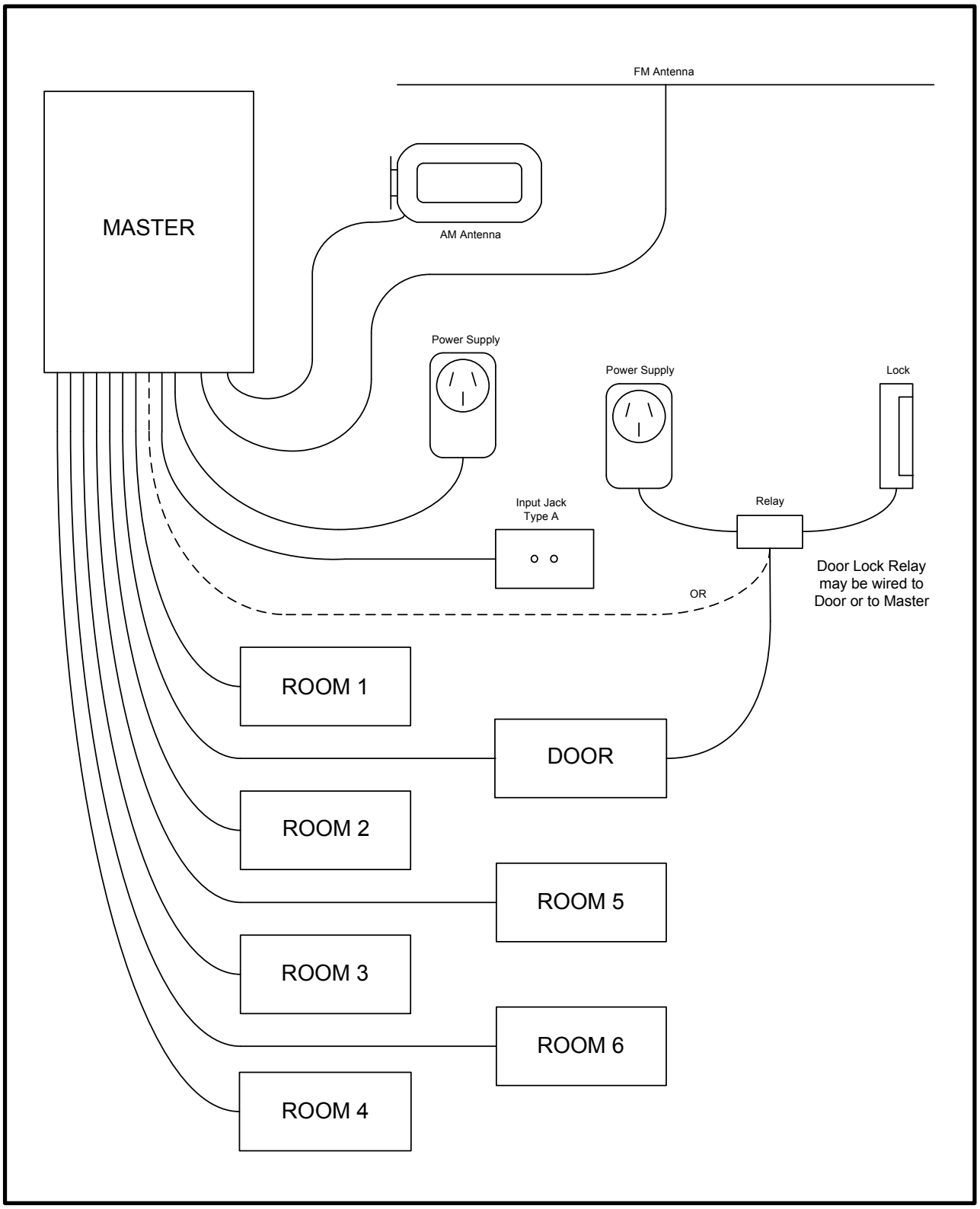

BLOCK DIAGRAMS FOR ROOM STATION ONLY SYSTEMS

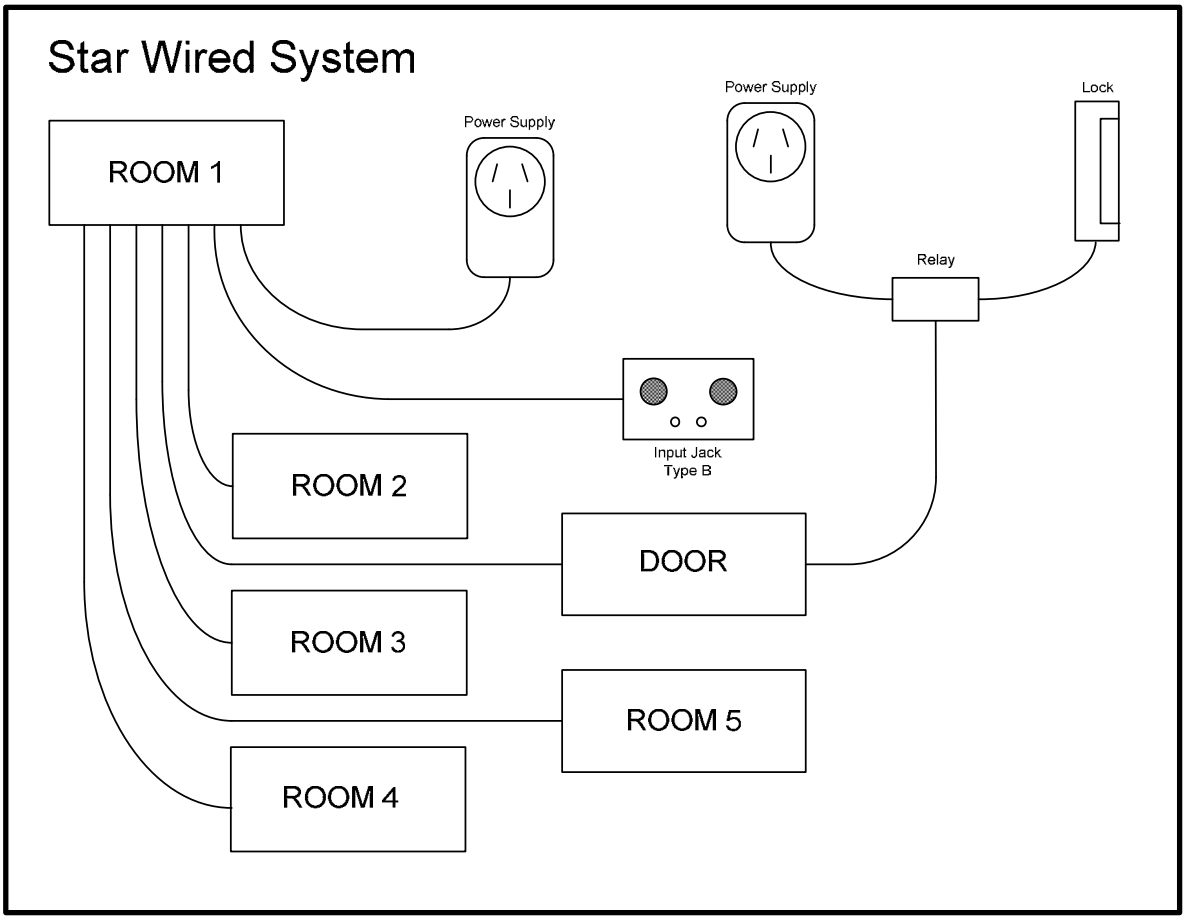

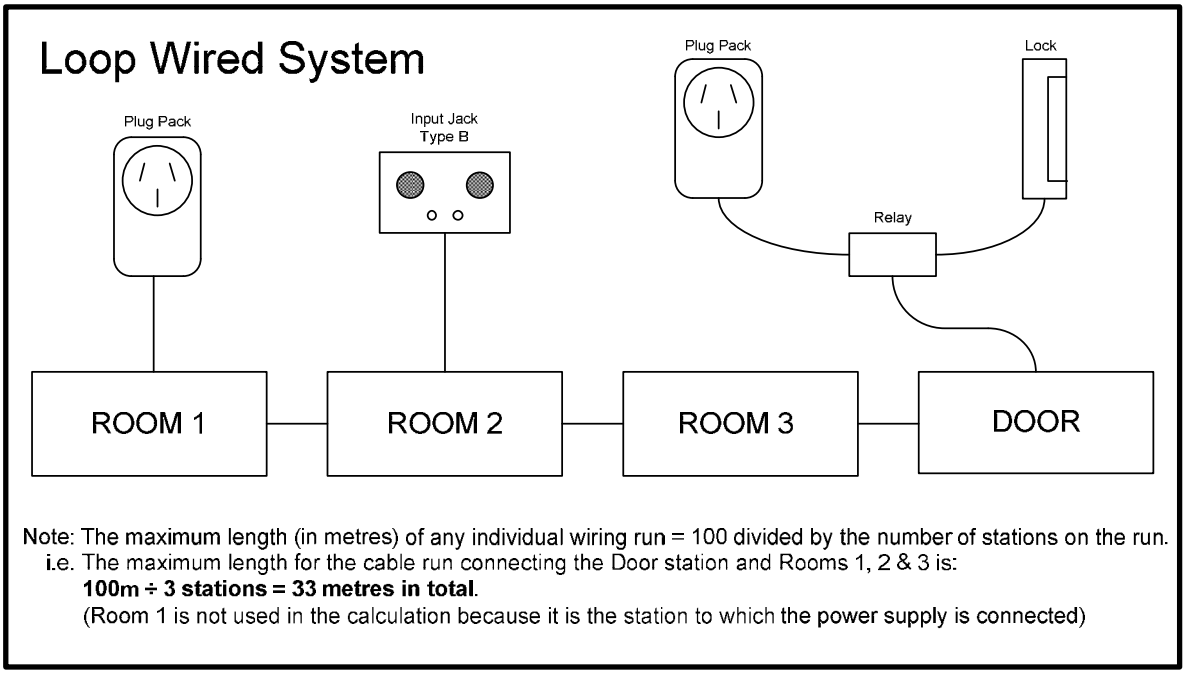

Note: The maximum length (in metres) of any individual wiring run = 100 divided by the number of stations on the run.
i.e. The maximum length for the cable run connecting the Door station and Rooms 1, 2 & 3 is:
100m ÷ 3 stations = 33 metres in total.
(Room 1 is not used in the calculation because it is the station to which the power supply is connected)

IMPORTANT:
On Room Station Only systems, a 22K load resistor is required and should be fitted across the VLC and NEG terminals of the Room Station to which the power supply is connected.

INSTALLATION

INSTALLATION OF M200 & M250 MASTER STATIONS

Timber Frame Not Yet Lined

Install the Master wall box flush with the front of the stud and brace it so as to limit any movement of the box when fitting the Master Station.

After the wall has been lined, cut out an opening to the inside dimensions of the wall box.

Note: For M200 model, use Metal Wall Bracket Part Number: 100-975

Wall Box for Master Station – Timber Frame Wall – Not Lined

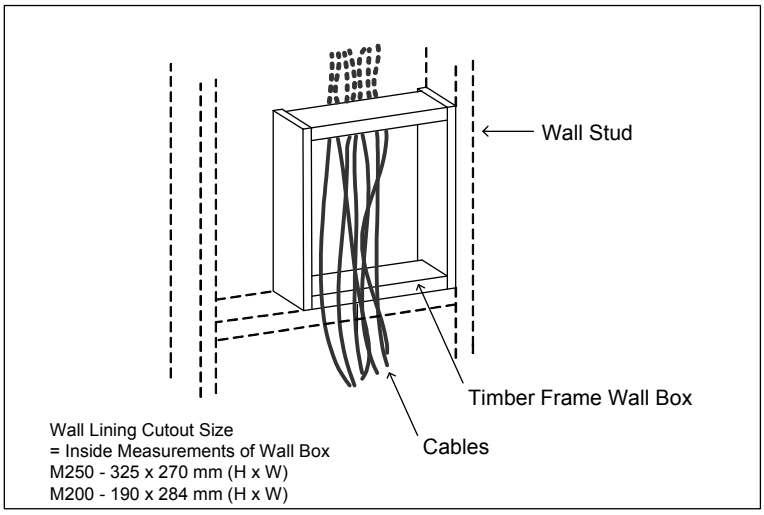

Timber Frame Wall Already Lined

Cut out an opening in the wall lining but do not cut right up against the wall stud or noggin ensuring that there is enough wall lining overlap to cover the wall box frame.

Slide the Master wall box in side ways, then straighten it up and firmly nail it to the stud so that it is flush with the front of the stud. (M250 - H 325mm x W 270mm) (M200 - H 190 x W 284)

Note: For M200 model, use Metal Wall Bracket Part Number: 100-975

Wall Box for Master Station – Timber Frame Wall – Already Lined

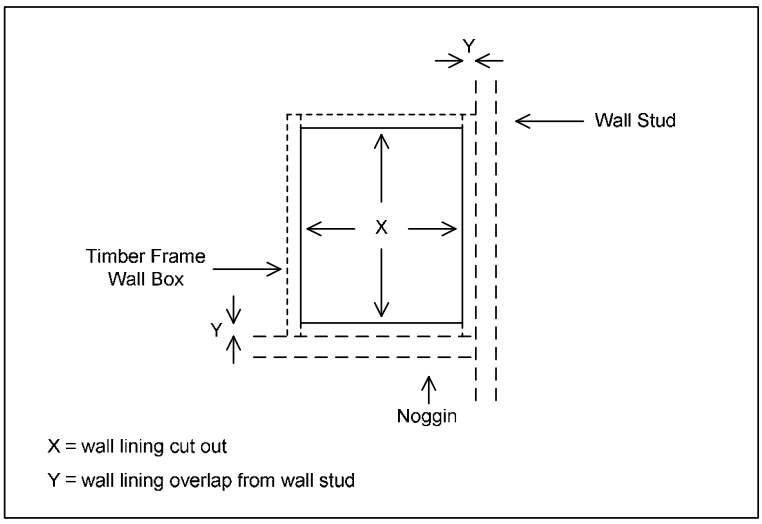

Cavity Brick Wall

Remove bricks and install wall box.

For homes under construction, install wall box as brickwork is going up.

Note: For M200 model, use Metal Wall Bracket Part Number: 100-975 or construct a suitable timber frame.

Wall Box for Master Station – Cavity Brick Wall

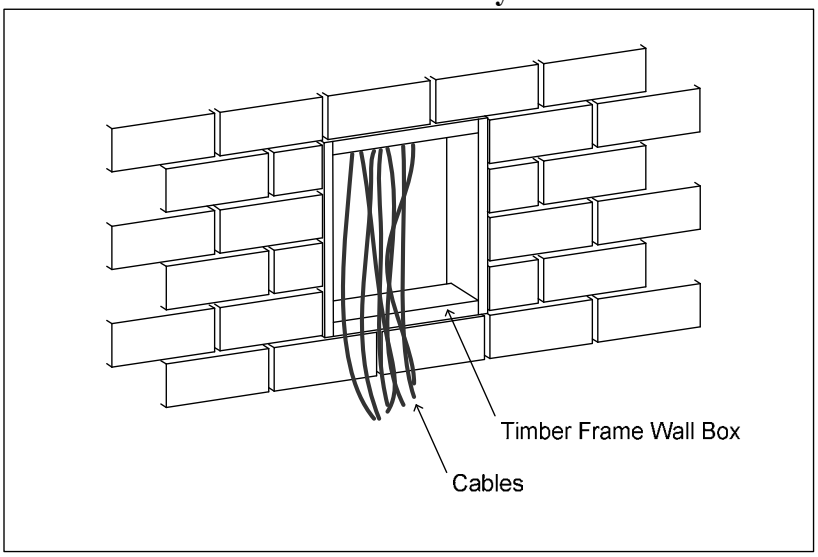

Fitting the Master to the Wall

Pull the cables through the wall box.

Lay the master face down on the bubble wrap provided in the packaging.

Fit all the terminal blocks to the terminal headers on the rear of the master.

Terminate the wiring as per the following MASTER TERMINATIONS section.

Separate the back housing from the master front

- For the M250, the bottom latches on each side of the plastic front will need to be released
- For the M200, the bottom of the plastic front can be pulled away from the bottom of the plastic back.

Fit the back housing into the wall and secure using the 6G x 1½" screws provided or other appropriate screws (depending on the wall box arrangement being used).

Hang the master front from the top of the back housing.

Push the bottom of the plastic front clipping it into the plastic back.

- Ensure all the internal wiring of the master remains clear of the mating parts
- For the M250, be sure to press and correctly align the plastic clips at the bottom of the back housing as the front is pushed into position.

M200/M250 Master Terminations

VDC IN

13.8V & 0V - Input from regulated **linear** 13.8V supply (3A min for master and up to 10 room door stations)

INTERCOM

POS	- Connects to Corresponding terminal at Room and Door stations
NEG	- Connects to Corresponding terminal at Room and Door stations
TC	- Connects to Corresponding terminal at Room and Door stations
VLC	- Connects to Corresponding terminal at Room stations only
VLC1	- Connects to VLC terminal at Door station 1
VLC2	- Connects to VLC terminal at Door station 2
VLC3	- Connects to VLC terminal at Door station 3
SHLD	- Not Connected (except where shielded cable used)
COM1	- Connects to Corresponding terminal at Room and Door stations
COM2	- Connects to Corresponding terminal at Room and Door stations
MUS1	- Connects to Corresponding terminal at Room stations only
MUS2	- Connects to Corresponding terminal at Room stations only
AUX	- Connects to Corresponding terminal at Room stations only (optional)

MUSIC INPUT

L CH	- Left channel audio output from CD, MP3 player etc
GND	- Audio output GND from CD, MP3 player etc
RCH	- Right channel audio output from CD, MP3 player etc

LOCK OUTPUT

LK1	- Switched negative for door lock 1 relay
LK2	- Switched negative for door lock 2 relay
LK3	- Switched negative for door lock 3 relay
COM+	- Positive 12V for all three lock relays (Relay coil resistance should be 240 ohm or greater)

INPUTS / OUTPUTS

G/STAT	- To one side of Gate Status reed switch (or similar)
COM+	- To other side of Gate Status Switch
	- Pos 12V for AUX 1 and AUX 2 relays
AUX1	- Switched negative for AUX 1 relay
AUX2	- Switched negative for AUX 2 relay

CAM PWR

12V & 0V - Regulated 12V output for powering stand-alone cameras

CAM 1

VID1	- Video Signal from door station 1 camera or other PAL video device
GND	- Video GND from camera on door station 1 or other PAL video device

CAM 2

VID2	- Video Signal from door station 2 camera or other PAL video device
GND	- Video GND from camera on door station 2 or other PAL video device

CAM 3

VID3	- Video Signal from door station 3 camera or other PAL video device
GND	- Video GND from camera on door station 3 or other PAL video device

VIDEO OUT

SIG	- Video signal for external PAL video displays
GND	- Video GND for external PAL video displays
12V	- This output can be used to activate a 12V relay(s) which switches 12V DC to external PAL video display(s)
0V	- Provides 0V for the external video display control relay

FM 300Ω

FM1 & FM2	- FM Ribbon antenna (or external FM antenna wired using 75Ω coaxial cable and connected to master using 75Ω to 300Ω balun) - Not used for masters fitted with DAB+ / FM radio

AM 75Ω

SIG & GND	- AM Loop antenna wired back to master using 75Ω coaxial cable (AM/FM model) - DAB+ / FM antenna wired back to the master using 75Ω coaxial cable (DAB+ / FM model)

INSTALLATION OF R200 (S1-R) ROOM STATION

The room station is normally mounted at a height from the floor of approximately 1400mm

If a surface mount back box is being used, feed the cable through the back box and secure the back box to the wall using screws and appropriate wall plugs.

If a recess mount back box is being used, a rectangular cut-out 201mm (W) x 91mm (H) will be required preferably with one side of the cut-out being adjacent to a wall stud if possible.

Pull the cable through the back box and secure using screws and appropriate wall plugs (where required).

Assemble the pcb, keymat, and plastic insert to the metal plate as shown below.

Fit the terminal block to the PCB and terminate wires from the cable as per the ROOM STATION TERMINATIONS section below.

Secure the metal plate to the back box using the PT screws provided.

Fit the optional trim plate in position if required.

Finally clip the plastic front onto the back box.

Assembly of Room Station Components

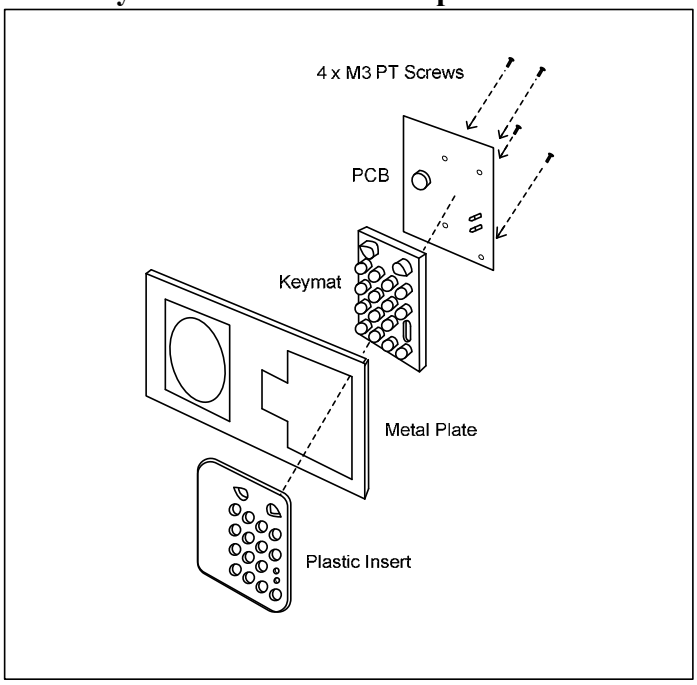

Room Station Terminations

POS	- Connects to Corresponding terminal at Master
NEG	- Connects to Corresponding terminal at Master
TC	- Connects to Corresponding terminal at Master
VLC	- Connects to Corresponding terminal at Master
SHLD	- Not Connected (except where shielded cable used)
COM1	- Connects to Corresponding terminal at Master
COM2	- Connects to Corresponding terminal at Master
MUS1	- Connects to Corresponding terminal at Master
MUS2	- Connects to Corresponding terminal at Master
AUX	- Connects to Corresponding terminal at Master (optional)

NOTE: For Room Station Only system (without a master) be sure to fit a load resistor from VLC to NEG at the room station to which the power supply is connected. A load resistor is provided with each room station however only one load resistor is required for the entire system.

INSTALLATION OF K200 (S1-DT) DESKTOP STATION

The desktop station connects to a wall plate by means of a CAT5 Patch Lead (RJ45 to RJ45)
The patch lead should be “straight through” and not “crossover” in that the wire colour coding should be the same at both ends of the lead.

The wall plate used is to be fitted with a CAT5 IDC Jack marked with T568A colour coding.
(Many CAT5 IDC Jacks have both T568A and T568B colour coding and are marked by A or B respectively)

The CAT5 cable from the master wires to the CAT5 IDC connector according to the T568A colour coding standard.

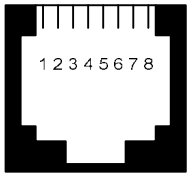

The pin numbering for the RJ45 jack on the wall plate and on the Desktop Station is as per this drawing.

Using the recommended straight through patch lead, the cable functions are as follows:

PIN	FUNCTION	WALL PLATE CONNECTIONS (T568A)
1	POS	GREEN/WHITE
2	NEG	GREEN
3	TC	ORANGE/WHITE
4	COM2	BLUE
5	COM1	BLUE/WHITE
6	VLC	ORANGE
7	MUS1	BROWN/WHITE
8	MUS2	BROWN

Please note that the IDC connections on the RJ45 wall plate jack are designed to work best with solid core CAT5 cable.

The use of stranded CAT5 cable however is recommend for making up patch leads.

INSTALLATION OF D200 (S1-FD) DOOR STATION

The door station is normally mounted at a height from the floor of approximately 1400 to 1500mm.

If a surface mount back box is being used, feed the cable through the back box and secure the back box to the wall using screws and appropriate wall plugs.

If a recess mount back box is being used, a brick is usually removed and a metal wall box fitted. (Part Number: 100-976)

Pull the cable through the metal wall box and the door station back box and secure the back box to the metal wall box using screws.

Fit the terminal block(s) to the PCB and terminate wires from the cable as per the DOOR STATION TERMINATION section below.

Secure the metal plate to the back box using only one screw initially as programming and volume level adjustments will most likely need to be made to the PCB before the unit is finally sealed.

After the unit has been programmed and the volume levels adjusted, the installation can then be completed.

Secure the metal plate to the back box using the PT screws provided.

Fit the optional weather shield if required (see part numbers below)

Fit the optional trim plate in position if required.

Finally clip the plastic front onto the back box.

Note: - Fitting of a weather shield is recommended where the station may be exposed to weather.
Recommended weather shield is: P/N 100-962

D200 (S1-FD) Door Station Terminations

10-WAY BLOCK

POS - Connects to Corresponding terminal at Master
NEG - Connects to Corresponding terminal at Master
TC - Connects to Corresponding terminal at Master
VLC - Connects to corresponding VLC terminal at the Master depending on Door Station number *See Note 1
SHLD - Not Connected (except where shielded cable used)
COM1 - Connects to Corresponding terminal at Master
COM2 - Connects to Corresponding terminal at Master
CH – - Switched negative for Chime Relay
\+ - Positive 12V for Lock Relay and Chime Relay
LK – - Switched negative for Lock Relay

2-WAY BLOCK

V SIG - Connects to corresponding VID terminal at the Master depending on Door Station number *See Note 1
SHLD - Connects to corresponding GND terminal at the Master depending on Door Station number *See Note 1

Note 1: - Each door station becomes Door 1, 2, or 3 depending on which VLC terminal it is connected to at the master
- Depending on the number of Door stations fitted, they should be connected to the master starting at VLC1, then VLC2 etc
- V SIG and SHLD from each door station connects to the corresponding camera input at the master i.e. CAM1 for Door 1, CAM2 for Door 2 and CAM3 for Door 3

Note 2: - Relays used for Lock Output and Chime output should have a coil Resistance of 240 ohm or greater
- Relays to control lock outputs can be fitted at master or at door stations
- The Lock and Chime Controlled outputs are for optional applications

Note 3: - For Room Station Only systems, VLC of all door stations connects to VLC of the room station to which the power supply is connected

INSTALLATION OF ALLOY DOOR STATION

This station is designed to be surface mounted.

On brick, stone or cement walls, ensure that there is a small recessed section, where the cabling protrudes through the wall, to facilitate the video connector, balun or any other connections.

Remove the hex head screw from the bottom of the door station to allow the metal front to be separated from the plastic body.

Using the plastic body as guide, mark the four mounting points for the four corners of the plastic body.

Drill four holes into the wall, suitable for the particular wall plugs or wall anchors being used.

Fit the plugs or anchors to the wall.

Remove the Pozi head screw at the top of the plastic back of the door station body allowing the plastic back to be removed from the main body. Note the position of the small removable metal plate that the screw threads into. (For when the unit is later reassembled)

If the Lock or the Chime Output functions are to be utilized, drill a 3.5mm hole in the plastic back just to the right of the video cable that protrudes through the plastic back.

Feed the 3 wires from the supplied 3 way lead through the hole (from the inside) pulling the wires through about 2/3 of the way.

Plug the 3 way connector into the 3 way header located on the circuit board just above the speaker.

If a weather shield is to be fitted, pull the cable through the slot in the weather shield and loosely secure the weather shield to the wall using just one or two mounting points.

Strip back the intercom cable coming out of the wall and terminate as per the DOOR STATION TERMINATION section on the following page.

Do not secure to the wall at this stage as programming and volume level adjustments will most likely need to be made to the PCB before the unit is finally sealed.

After the unit has been programmed and the volume levels adjusted, the installation can then be completed.

Hook the two plastic tabs on the bottom of the plastic back into the bottom of the main body.

Ensure the wires between the body and the plastic back tuck neatly into the rectangular cut-out in the pcb.

Refit the pozi head screw at the top of the plastic back.

Ensure the small metal plate is correctly inserted into the slot at the bottom of the plastic back.

Remove the one or two screws already holding the weather shield in position.

Position the weather shield and main body of the door station and secure using four suitable screws.

Hook the metal front over the top of the plastic body.

Position and secure the hex head screw at the bottom of the unit while pressing the bottom of the unit against the wall.

Note: - Fitting of a weather shield is recommended where the station may be exposed to weather.

Recommended weather shields are: P/N 100-906 (Tinted)
P/N 100-907 (Clear)

Alloy Door Station Terminations

6-WAY BLOCK

POS - Connects to Corresponding terminal at Master
NEG - Connects to Corresponding terminal at Master
TC - Connects to Corresponding terminal at Master
VLC - Connects to corresponding VLC terminal at the Master depending on Door Station number *See Note 1
COM1 - Connects to Corresponding terminal at Master
COM2 - Connects to Corresponding terminal at Master

3-WAY LEAD

BLACK WIRE (CH –) - Switched negative for Chime Relay
BLUE WIRE (+) - Positive 12V for Lock Relay and Chime Relay
WHITE WIRE (LK –) - Switched negative for Lock relay

BNC CONNECTOR

CENTRE (V SIG) - Connects to corresponding VID terminal at the Master depending on Door Station number *See Note 1
OUTER (SHLD) - Connects to corresponding GND terminal at the Master depending on Door Station number *See Note 1

Note 1:
- **Each door station becomes Door 1, 2, or 3 depending on which VLC terminal it is connected to at the master**
- **Depending on the number of Door stations fitted, they should be connected to the master starting at VLC1, then VLC2 etc**
- **V SIG and SHLD from each door station connects to the corresponding camera input at the master i.e. CAM1 for Door 1, CAM2 for Door 2 and CAM3 for Door 3**

Note 2:
- **Relays used for Lock Output and Chime output should have a coil Resistance of 240 ohm or greater**
- **Relays to control lock outputs can be fitted at master or at door stations**
- **The Lock and Chime Controlled outputs are for optional applications**

Wiring the Lock and Chime Outputs

The Lock output (LK) and Chime (voltage) output (CH) will provide 12 Volt DC @ 50mA which can be used to power up relays which in turn will switch voltage to the device being used.

Note: Both these outputs are designed to drive a load, with a resistance of not less than 240 ohm. Check the coil resistance of the relays to be used with a multimeter.

Powering Relays from Lock from Lock and Chime Outputs

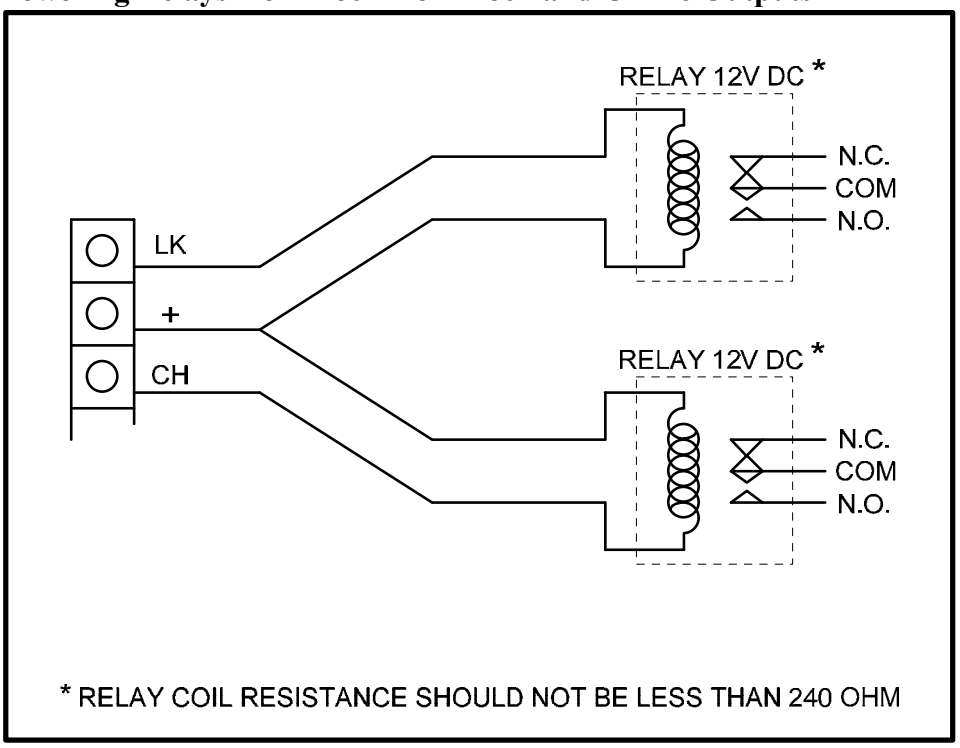

Lock Output

The LK terminal provides an output voltage (to activate an automatic gate or release an electric door strike) whenever the LOCK button is pressed at the Master or any Room Station (after communicating to the door station).

For an electric door strike, power can be taken from the door station or from a separate power source depending on the resistive load represented by the lock – See following diagrams for further detail.

Operating Automatic Gates

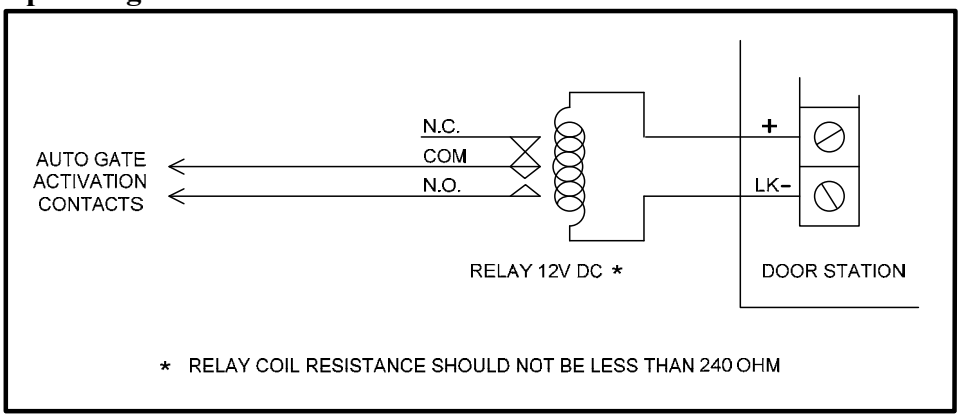

Powering Electric Lock from Door Station

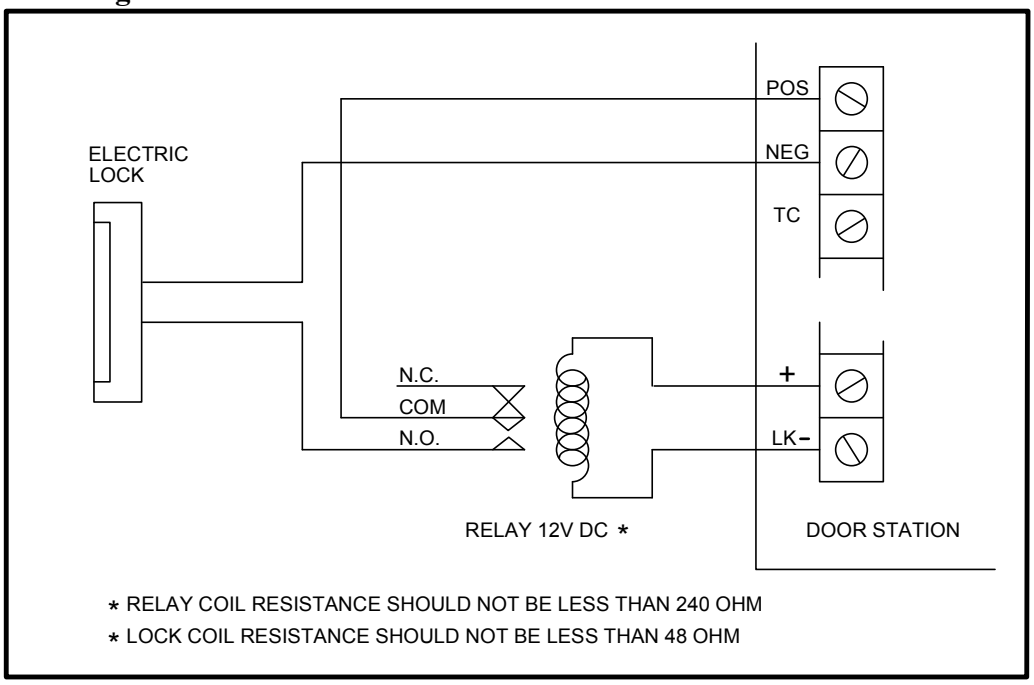

WARNING

Do not use this method of wiring for electric locks with a coil resistance of less than 48 ohm

Powering Electric Lock from Separate Supply

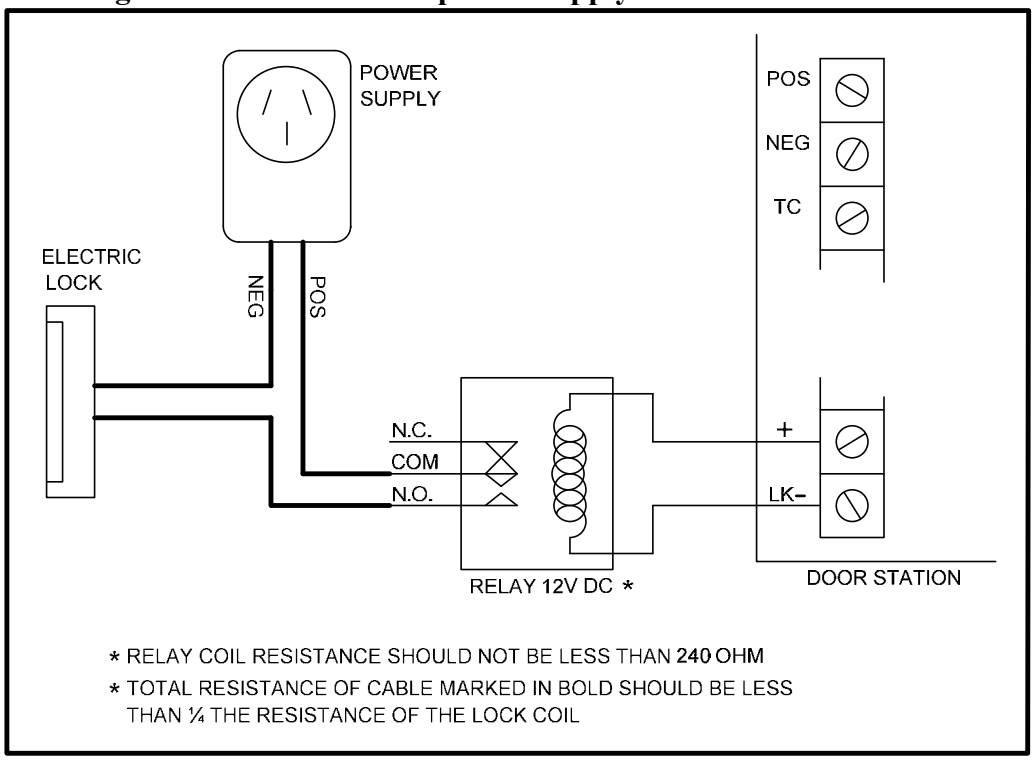

NOTE

- This method of wiring **should be** used for electric locks with a coil resistance of less than 48 ohm.
- For electric locks with a coil resistance of less than 8 ohm, it is recommended that the distance between the power supply, lock relay and electric lock be kept as short as possible.
- This method of wiring is also suitable, and recommended, for electric locks with a high coil resistance.

INSTALLATION OF AUXILIARY INPUT JACKS

INPUT JACK TYPE A – For systems with a master

Installation in Timber Frame Walls

Cut out the wall lining so as to allow fitting of the mounting bracket.
Pull the cable through the opening, strip the required wires, and screw into the terminals of the Input Jack as indicated.
Screw the Input Jack to the wall.

INPUT JACK TYPE B – For systems without a master

Installation in Timber Frame Walls

Cut out the wall lining so as to allow the circuit board to be recessed into the opening.
Mark the mounting points and fit appropriate wall plugs.
Pull the cable through the opening, strip the required wires, and screw into the terminals of the Input Jack as indicated on the diagram.
Screw the Input Jack to the wall.

Installation in Cavity Brick Walls

Note: A standard "HPM Stand Off Mounting Block" is recommended, as it may be difficult to enlarge the hole in the brickwork to allow recessing of the circuit board.

Drill through the brickwork to the cavity.
Pull the cable through the opening.
Drill and plug the brickwork at the mounting points for the "Stand Off Mounting Block."
Pull the cable through the mounting block and screw the mounting block to the wall.
Strip the required wires and screw into the terminals of the Input Jack.
Screw the Input Jack to the mounting block.

CONNECTING AUDIO SOURCE TO INPUT JACKS

The Input Jack Type A and Input Jack Type B each have two RCA sockets fitted to the front plate, which allows for connection to an audio source such as a CD player, iPod or computer.

A separate audio connection lead will need to be purchased with 2 x RCA plugs at one end and a plug (or plugs) at the other end to suit the audio source being used.

Some common Audio Leads used are:

2 x RCA plugs to 2 x RCA plugs - for CD player, DVD player or tape deck.
2 x RCA plugs to 3.5mm stereo plug - for MP3 player, computer or portable audio devices.
2 x RCA plugs to 6.5 mm stereo plug - for headphone output on some stereo systems.

Connection Diagram for Input Jack Type B – 8 Wire Room Station Only Systems

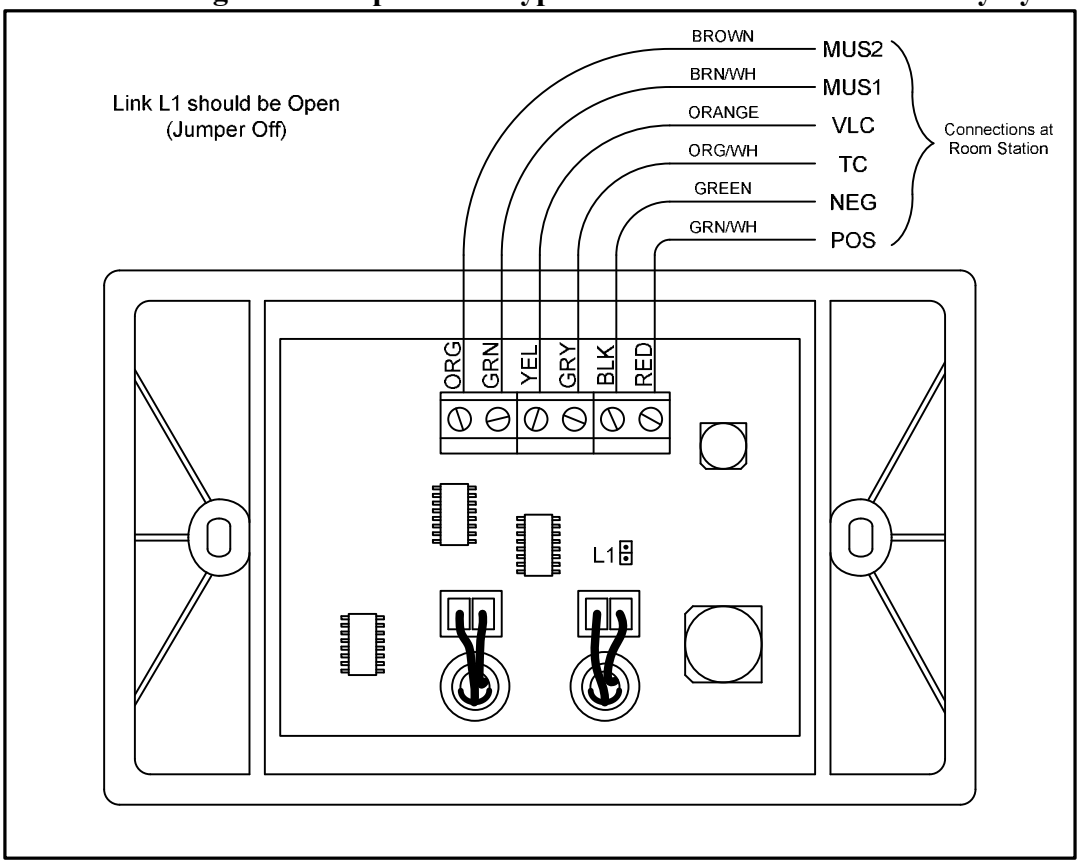

Connection Diagram for Input Jack Type B – 6 Wire Room Station Only Systems

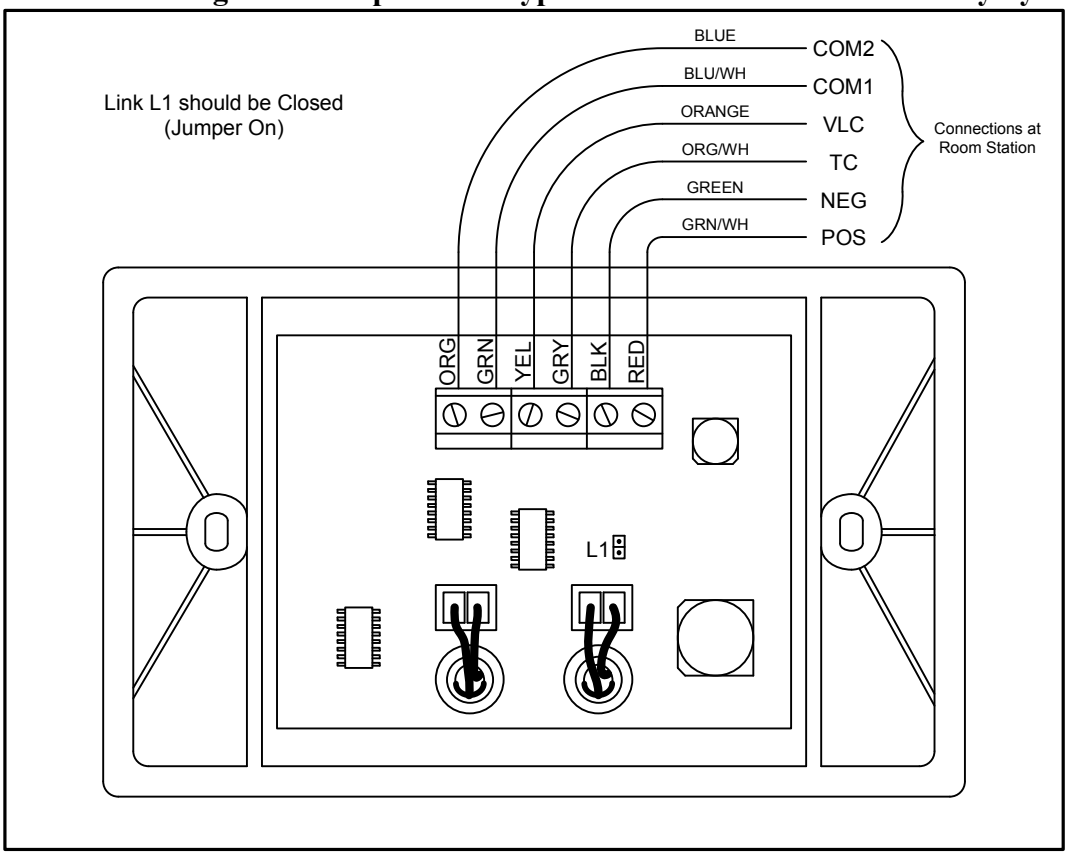

WIRELESS AUDIO TRANSMITTER

(Only for systems fitted with a Master Station)

Connections

Connect the plug pack to the Wireless Audio Transmitter.

Connect the audio output of a PC, CD player, TV, or any other device with an audio output, to the 3.5mm stereo input jack on the Wireless Audio Transmitter.

Connect the plug pack to the power point and switch the power point on.

INSTALLATION OF AUXILIARY OUTPUT BOARD

(For Room Station Only Systems – No Master)

The Auxiliary Output Board can be mounted to the back of any Room Station.
Using the pcb as a template, mark the position of four mounting holes on the rear of the room station back housing.
Drill four 3mm holes in the marked positions.
Secure the Auxiliary Output Board to the rear of the room station back housing using four M3 x 10mm screws, four M3 nuts and four M3 fibre (or nylon) washers.
Fit the fibre washers between the pcb and the back housing as spacers.
Orientate the board so the header for the 4way lead is in the closest position to the cable access hole in the rear of the room station.
Fit the supplied 4-way lead to the 4-way header on the Auxiliary PCB.
Feed the other end of the 4way lead through the cable access hole and plug onto the 4 way header on the room station pcb after all other wiring to the room station has been completed.
It is recommended that power being switched through the Auxiliary relay contacts, **not** be taken from the POS and NEG terminals on the Room Station, but rather from a separate power source. This is to prevent a voltage drop at the Room Station while the auxiliary device is being powered.

NOTE: The relay contacts on the Auxiliary Output Board are **Dry Contacts**. They act as a switch and do not output any voltage on their own.

IMPORTANT: For this feature to operate from all stations, the AUX terminals of all room stations are to be connected.

WARNING: This board is **not** designed to switch **High Voltage** directly. A separate suitable relay can be used in conjunction with this board, where the switching of **High Voltage** is required.

Typical Auxiliary Output Board Applications

Electric Door Strike

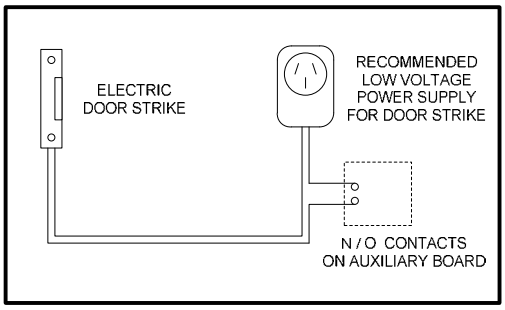

Automatic Gates

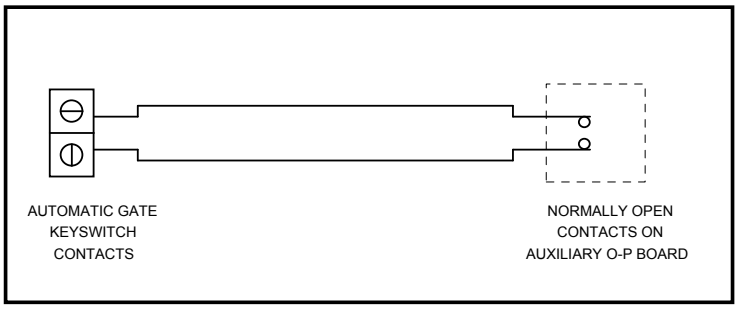

INSTALLATION OF POWER SUPPLY

A regulated 13.8V dc power supply is required to power the system.
For systems using a Master, it is imperative that a regulated **linear** supply be used, as **switch mode** supplies will cause interference to AM radio reception.

Note: - Since some linear supplies also generate interference, it is suggested that only power supplies recommended by iCentral be used.
- See sections "LOCATION OF EQUIPMENT" and "CABLING" for important details on power supply location and cabling.

POWER SUPPLY CURRENT RATING

It is important to use a power supply with a current rating sufficient for the size of the system.

The power supply current rating (for a system as a whole) is determined by adding the peak current requirement of each of the components making up the system.

System One Component	Current
M200/M250 Master Station	0.8A
R200 (S1-R) Room Station	0.15A
K200 (S1-DT) Desktop Station	0.15A
D200 (S1-FD) Door Station – With Camera	0.17A
D200 (S1-FD) Door Station – No Camera	0.12A
Auxiliary Input Jack	0.1A

CONNECTION TO A MASTER SYSTEM

For a system fitted with a Master Station, the power supply is to be connected to the Master Station.
The Master Station has a dedicated pair of terminals labelled "VDC IN" on the termination PCB for the connection of the power supply.
Because a DC power supply is used, it is important that the positive lead of the power supply connects to the 13.8V terminal and the negative lead of the power supply connects to the 0V terminal.

CONNECTION TO A ROOM STATION ONLY SYSTEM

For a system **not** fitted with a Master Station, the power supply is to be connected to a Room Station.
Where the system is star wired, the power supply should connect to the Room Station to which all other stations have been wired.
Where the system is loop wired, it is recommended that the power supply be located centrally in the system, as shown in “Figure A” below, as the length of a run of cable is calculated from the station to which the power supply is connected.

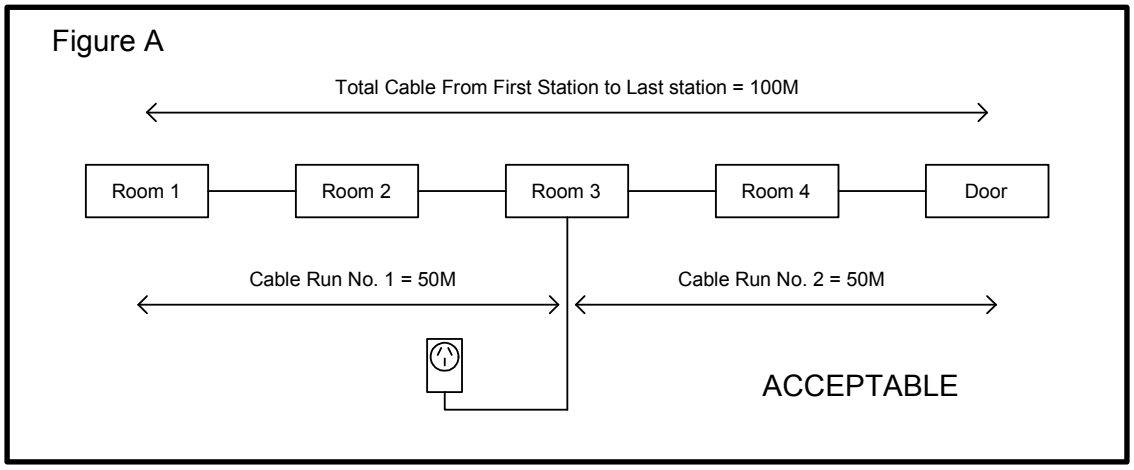

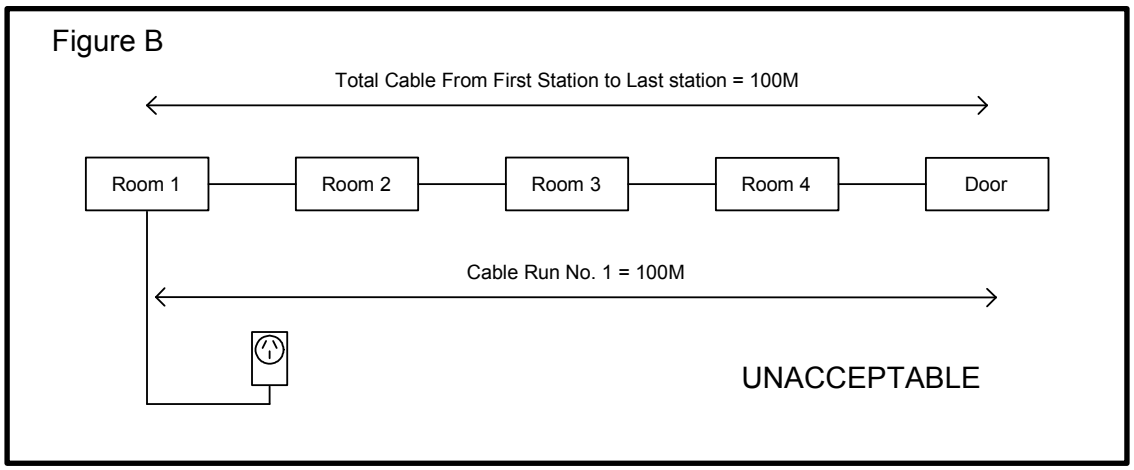

In **Figure A**, there are effectively two cable runs of 50M each, with two stations on each run. This is acceptable because it is permissible to have two stations on a 50M run of cable. (see section " MAXIMUM LENGTH OF CABLE RUNS")

In **Figure B**, there is only one cable run of 100M in length, with four stations on the run. This is unacceptable because it is only permissible to have one station on a 100M cable run (see section " MAXIMUM LENGTH OF CABLE RUNS")

Because a DC power supply is used, it is important that the positive lead of the power supply connects to the POS terminal and the negative lead of the power supply connects to the NEG terminal of the applicable Room Station.

MASTER SETUP

INITIAL POWER-UP

On power-up the master displays a blue welcome screen showing the applicable software version.
Press CLEAR to clear screen

ENTERING PROGRAM MODE

Press PRIV and MON buttons simultaneously.
The GENERAL OPTIONS menu is displayed.

NAVIGATING IN PROGRAM MODE

Press ▲ or ▼ buttons to navigate up or down.
Press ▶ or ◀ to alter value
Use PREV/NEXT MENU to navigate between menus

GENERAL OPTIONS MENU

8 WIRE / 6 WIRE – 8 WIRE is the default setting however 6 WIRE can be selected to cater for existing cabling having only 6 conductors

Note: For 6 wire operation, wire links are required between COM1 and MUS1 and between COM2 and MUS2 at master only.

BACKLIGHT – Options are OFF, LOW, MEDIUM & HIGH with medium being the default value

SINGLE / DOUBLE DIGIT – Refers to how many buttons need to be pressed to call individual stations. SINGLE DIGIT is the default setting and is the most convenient setting for calling up to 7 individual stations (or 7 groups of stations). The double digit setting is required for systems where more than 7 stations are to be called individually.

Note: Master and all room stations are to be programmed to the same setting.

STATION NUMBER – Master can be programmed from 1 to 7 (single digit)
or 11 to 17, 21 to 27, 31 to 37 (double digit)

Note: The number 8 is normally reserved for activation of lock release feature and is not used for station numbering.

STATION OPTIONS MENU

ADDITIONAL DISPLAY / VIDEO ROOM STN – ADDITIONAL DISPLAY is the default setting and should be used where extra display(s) are connected via the VIDEO OUT terminals. The VIDEO ROOM STN setting changes the way the Video Out - Switched 12V operates and is intended for use with video room stations (to be released in the future).

 # CAM DOOR STN – Sets the number of door stations that have an inbuilt or associated external camera. Options are 1, 2 or 3. If "1 CAM DOOR STN" is selected, door station No.1 (wired to VLC1) will be the door station with the camera.
If "2 CAM DOOR STN" is selected, door stations 1 & 2 (wired to VLC1 and VLC2) will be the door stations with cameras.

NON-CAM DOOR STN – Sets the number of door stations that do not have an inbuilt or associated external camera. Options are 1, 2 or 3. If "2 NON-CAM DOOR STN" is selected, door stations 2 & 3 (wired to VLC2 and VLC3) will be the door station without cameras. If "2 NON-CAM DOOR STN" is selected, door station
No. 3 (wired to VLC3) will be the door station without a camera.

Note: The maximum combined number of CAMERA and NON-CAMERA door stations is 3 (in total)

ADDITIONAL CAM – Sets the number of stand alone cameras (not associated with door stations)

Note: - The maximum combined number of door station and stand alone cameras are 3 (in total)
- Door station cameras are connected to camera inputs beginning at CAM 1 and stand alone cameras are then connected to the remaining camera inputs.

AUDIO OPTIONS MENU

SYSTEM RADIO VOLUME – Increases or decreases the radio volume throughout the entire system.

SYSTEM AUX VOLUME – Increases or decreases the auxiliary music volume throughout the entire system.

Note: - The above levels are best set so that music is heard at a comfortable level at the room stations with their volume controls set for normal communication levels
- The above adjustments can be used to balance the volume levels for radio and auxiliary music so they are approximately equal when switching between them.

LOCAL COMMS VOLUME – Allows the volume level for communication at the master to be pre-set to a desired level.

Note: - In normal operating mode, adjusting the volume using the volume + and – keys while receiving communication changes the programmed Local Comms Volume level.
- In normal operating mode, adjustment using the volume + and – keys, while receiving communication or door chime, adjusts the local communication level and is independent of the music level.
- In normal operating mode, adjustment using the volume + and – keys, while receiving music, adjusts the local music level and is independent of the communication level.

VIDEO OPTIONS MENU

CAMERA # – Selects the camera input to be adjusted. (Camera 1, 2 or 3)

BRIGHTNESS – Adjusts brightness for selected camera.

CONTRAST – Adjusts contrast for selected camera.

COLOUR – Adjusts colour for selected camera.

Note: Initially adjusting Camera 1 also makes identical adjustments for cameras 2 and 3
Once Camera 2 or 3 is adjusted, the adjustments then become independent of each other

AUX1 OPTIONS MENU

TIMER MODE – programmable from 1 to 99 seconds or 1 to 99 minutes
– output turns on when AUX button pressed followed by 1
– output turns off after programmed duration

TOGGLE MODE – Output turns on and off each time AUX followed by 1 is pressed

CHIME TRIGGER MODE – Output turns on 2 seconds after the chime is activated for the programmed duration.
– This output can be used to activate a DVR or various other video capture devices when the chime is activated

AUX2 OPTIONS MENU

As per Aux 1 Options but applicable to Auxiliary Output 2

OTHER OPTIONS MENU

GATE INPUT LED – The Gate Status Input which activates the Gate Status LED on the front of the master can be programmed to normally open (N/O) or normally closed (N/C) depending on switch used and customer preference as to whether LED is on when gate is open or gate is closed.

CLIENT SETTINGS – Once intercom has been set up after installation, the settings can be saved by pressing 1. If someone inadvertently changes critical settings, the original settings that were saved can be restored by pressing 2

FACTORY DEFAULT – The default factory settings can be reloaded if required by pressing 1

SYSTEM TEST MENU

This menu is primarily for factory testing however it can be used to self-check various aspects of the system.

KEYPAD TEST – Pressing various keys will show verification on the screen. Navigation and Clear keys will not show verification but instead perform their respective function.

LED TEST – Functioning LEDs will flash

VOLTAGE TEST – This test will show if there is a fault with regard to any of the master's voltage level control input/output terminals including open circuit output or excessive external loading - i.e. shorts etc
– This test applies to VLC, VLC1, VLC2, VLC3, TC and AUX terminals.

AUX 1 TEST – This test requires that Auxiliary Output 1 be temporarily linked to the Gate Status input

AUX 2 TEST – This test requires that Auxiliary Output 2 be temporarily linked to the Gate Status input

CAMERA 1 TEST – This test will display the image from the camera or other video device connected to CAM 1 input.

CAMERA 2 TEST – This test will display the image from the camera or other video device connected to CAM 2 input.

CAMERA 3 TEST – This test will display the image from the camera or other video device connected to CAM 3 input.

Note: Any video fault could be related to a fault with the camera or connecting cable but it could also be related to a fault with the particular camera input. If one input works but another does not, simply swapping the devices at the inputs will indicate whether the fault is with the camera/cable or video input.

RADIO/CLOCK ADJUSTMET (AM/FM MODEL)

SETTING THE CLOCK

With the time displayed (Radio off):

- Press the "Mem" button, causing the minutes to flash.
- Use the "Up" and "Down" buttons to adjust the minutes.
- Press the "Mem" button, causing the hours to flash.
- Use the "Up" and "Down" buttons to adjust the hours.
  Note: Cycle the hours through 12 hours to change AM/PM
- Press the "Mem" button, to exit “time set” mode.

SETTING THE RADIO

- Press the “Mus” button at the Master, so the red LED illuminates.
- Turn the radio on, by pressing the “Power” button at Master.
- Tune to the desired frequency, using the “Up/Down” buttons.
- Allocate a preset memory location if desired, by pressing the “Mem” button, followed by a preset number, followed by the “Mem” button again.
- Use the Volume – and + buttons to adjust the volume at each station
  Note: Radio will only be at heard at stations set to Music mode (Red LED illuminated)
- The overall radio volume for the whole system can be adjusted if required using the Audio Options Menu in program mode.

RADIO/CLOCK ADJUSTMET (DAB+/FM MODEL)

SETTING THE CLOCK

- Setting the clock is not required as the time and date are automatically synchronized via DAB broadcasting.

SETTING THE RADIO

- Press the “Mus” button at the Master, so the red LED illuminates.
- Turn the radio on, by pressing the “Power” button at Master.
- Press the DAB+/FM to select the required band. (DAB+ is the default setting)
- Tune to the desired frequency, using the “Up/Down” buttons.
- Allocate a preset memory location if desired. To store a station into M1-M8, hold the corresponding button for 3 seconds.
- Use the Volume – and + buttons to adjust the volume at each intercom station
  Note: Radio will only be at heard at stations set to Music mode (Red LED illuminated)
- The overall radio volume for the whole system can be adjusted if required using the Audio Options Menu in program mode.

ROOM STATION SETUP

ENTERING PROGRAM MODE

Press PRIV and MON buttons simultaneously.
The red LED will flash the current station number.
When all programming options have been entered, press CLEAR to exit PROGRAM mode.

ROOM STATION CODING

For the purpose of Select Calling (calling individual or grouped stations), each station must be allocated either a Single Digit or Double Digit number. If the same number is allocated to more than one station, the stations having the same number will form a group. Allocating a number to a station is done by means of keypad programming as outlined below.

Single Digit Coding

Single Digit format is the default setting intended for systems requiring up to 7 select call channels. This format offers the convenience of calling individual or grouped stations by pressing only one button.

If not previously programmed, the station will be in the default Single Digit format where, in program mode, the red LED will repeatedly flash a string of 1 to 7 flashes representing the programmed Single Digit number (Default number = 1).

Enter a number between 1 and 8 by pressing the corresponding button. The red LED will now repeatedly flash the new programmed number.

Exit PROGRAM mode by pressing CLEAR, or remain in PROGRAM mode to program more options.

Double Digit Coding

Double Digit format is a programming option intended for systems requiring from 8 to 21 select call channels.

This format requires that two buttons be pressed in sequence to call individual stations.

If not previously programmed, the station will be in the default Single Digit format where, in program mode, the red LED will repeatedly flash a string of 1 to 7 flashes representing the programmed Single Digit number (Default number = 1).

Press the AUX button to toggle to Double Digit mode.

In Double Digit mode the red LED will repeatedly flash the following information.

- 2 quick flashes representing Double Digit mode
- 1 to 3 flashes representing the first digit (default = 1)
- 1 to 7 flashes representing the second digit (default = 1)

Enter a Double Digit number in the ranges of, 11 to 17, 21 to 27, or 31 to 37 (21 possibilities)

The red LED will repeatedly flash the following information.

- 2 quick flashes representing Double Digit mode
- 1 to 3 flashes representing the first digit of the new number
- 1 to 7 flashes representing the second digit of the new number

Exit program mode by pressing CLEAR or remain in PROGRAM mode to program more options.

Note: - Single and Double Digit format cannot be mixed in one system.
- Each station is to be individually programmed to the same format.
- Repeated pressing of the AUX button, while in program mode, will toggle between Single and Double Digit formats.

KEYPAD BACKLIGHTING

Keypad backlighting, which can be toggled on and off by pressing the DOOR button while in PROGRAM mode.

Note: Repeated pressing of the DOOR button, while in program mode, will toggle the backlighting On and Off.

VOLUME FEEDBACK TONE

When adjusting the volume level on the room stations, a feedback tone will be heard that varies in amplitude as the volume level is adjusted.

This feedback tone can be disabled by repositioning a jumper from ENABLE to DISABLE.

The jumper is labelled JMP1 on each room station pcb.

SIX WIRE OPERATION

Although System One is designed to operate optimally using 8-wire cabling, it will also operate using 6-wire cabling if required.

Note: The trade off in using 6-wire cabling is that music will mute at all stations during private communication where as with 8-wire cabling, music will only mute at the two stations involved in communication.

Selecting Six Wire Mode

In PROGRAM mode, press the HOUSE button to select 6-wire mode (green LED off).

Press CLEAR to exit Program Mode or leave in program mode to alter any programming options.

Note: - The station will toggle between 6-wire mode (green LED off) and 8-wire mode (green LED on) each time the HOUSE button is pressed while in program mode.

- Music wires (MUS1 and MUS2) are not required.

- Where this option is selected, all other stations (including master if used) must be programmed for 6-wire

DOOR STATION SETUP

DOOR STATION VOLUME ADJUSTMENTS

There are 2 adjustments on the door station which may require fine tuning after installation.

Note: A flat bladed screw driver with a blade width of 2 - 2.4mm is required to perform these adjustments. The use of an incorrect screw driver will result in the pot being damaged.

Chime Volume

Chime volume is adjusted by means of a miniature trim pot (VR2) situated on the door station circuit board. Turning this pot will vary the chime volume throughout the system. This pot should be adjusted so the chime volume comes through at an acceptable level at the internal room stations at their default volume setting.

Speaker Volume

Speaker volume at the door station is adjusted by means of a miniature trim pot (VR1) situated on the door station circuit board. Turning this pot will vary the speaker volume. This adjustment is best made while someone is communicating to the door station from one of the internal stations.

CHANGING THE CHIME

The chime melody can be changed to any one of ten options by means of the two programming switches (SEL & PROG) situated on the door station circuit board.

Procedure

- Press the Program button (PROG) – The red LED illuminates and the current chime plays.
- Press the Select button (SEL) – The next chime option plays.
- Repeatedly press the Select button until the desired melody is heard.
- Press the Program button to lock in selection – The red LED flashes.
- Press the Program button again to exit program mode – The red LED extinguishes.

Note: Pressing the Select button after all ten chime options have been sampled, will return to the first chime option.

CHIME (VOLTAGE) OUTPUT OPTIONS

The CH Terminal provides an output voltage whenever the chime button is pressed. The duration of this output voltage is set by 1of 4 programming options.

Chime Output Options

- Option #1 Single flash - Voltage present for duration of Bell Press
- Option #2 Double flash - Voltage present for duration of Chime
- Option #3 Triple flash - Voltage present for 10 seconds from moment of Bell Press
- Option #4 Quad flash - Voltage present for 30 seconds from moment of Bell Press

The chime output voltage duration can be changed by means of the two programming switches (SEL & PROG) situated on the door station circuit board.

Procedure

- Press the Program button (PROG) – The red LED illuminates and the current chime is played.
- Press the Program button again to select voltage output option mode – The red LED flashes the current output voltage option.
- Press the Select button (SEL) – The next output option is flashed by the red LED.
- Repeatedly press the Select button until the desired voltage output option is flashed by the red LED.
- Press the Program button again to lock in selection and exit program mode – The red LED extinguishes.

Note: Pressing the Select button after all 4 output options have been sampled, will return to the first output option.

INPUT JACK TYPE B SETUP

Where an Input Jack Type B has been wired into an 8-wire system, ensure the jumper has been removed from the two link pins labelled “L1”.

If the Input Jack has been wired into a 6-wire system, ensure the jumper has been fitted across the two link pins labelled “L1”.

The volume control on the Input Jack should be adjusted for the desired volume at the intercom stations with the Room Station volume controls adjusted to position for communication.

The tone control should be adjusted 1/2 way or to personal preference.

WIRELESS AUDIO TRANSMITTER SETUP

Turn on the intercom radio and press the MUSIC button at the Master, to enable MUSIC mode.

Tune the intercom radio to one of the FM frequencies listed in the table below that is not being used by a commercial FM radio station.

If a clear frequency cannot be found, use one that is picking up only a weak radio signal.

Store this frequency into the memory of the intercom radio, as a preset station.

Using the table below, program the four miniature programming switches (on the Wireless Audio Transmitter) so they correspond with the FM frequency chosen.

The output of the audio device should now be audible through the intercom master station.

FREQUENCY SWITCH TABLE									
S1	**S2**	**S3**	**S4**	**FREQ**	**S1**	**S2**	**S3**	**S4**	**FREQ**
L	**L**	**L**	**L**	**87.7MHz**	**L**	**L**	**L**	**H**	**87.7MHz**
H	**L**	**L**	**L**	**87.9MHz**	**H**	**L**	**L**	**H**	**87.9MHz**
L	**H**	**L**	**L**	**88.1MHz**	**L**	**H**	**L**	**H**	**88.1MHz**
H	**H**	**L**	**L**	**88.3MHz**	**H**	**H**	**L**	**H**	**88.3MHz**
L	**L**	**H**	**L**	**88.5MHz**	**L**	**L**	**H**	**H**	**88.5MHz**
H	**L**	**H**	**L**	**88.7MHz**	**H**	**L**	**H**	**H**	**88.7MHz**
L	**H**	**H**	**L**	**88.9MHZ**	**L**	**H**	**H**	**H**	**88.9MHZ**
H	**H**	**H**	**L**	**No Operation**	**H**	**H**	**H**	**H**	**No Operation**

AUXILIARY OUTPUT BOARD SETUP

The fitting of an Auxiliary Output Board to the System One intercom allows devices such as door strikes, automatic gates, courtesy lights etc. to be controlled from the Master or any Room Station.

Each Output Board provides two sets of "normally open" and "normally closed" dry relay contacts (RELAY 1 and RELAY 2).

The outputs can be set to toggle on and off with each activation, or time out after being activated, by means of bridging the appropriate jumper pins (M1 and M2).

The time-out duration can be adjusted from 1 to 45 seconds by means of adjustable trim pots (VR1 and VR2).

The time-out duration can be extended up to approximately 10 minutes by adding a 330uF low leakage electrolytic capacitor to position C2 for output 1 and position C8 for output 2.

The outputs are activated by pressing the AUX key on the intercom, followed by the programmed number of the output to be activated.

DIP switches, are used to set the number that the output will respond to. Output 1 can be set to respond to numbers 1, 3, 5 or 7 using DIP Switch 1 (DS1). Output 2 can be set to respond to numbers 2, 4, 6 or LOCK using DIP Switch 2 (DS2).

The board can be attached to the rear of any Room Station and is connected to the main board of the Room Station by means of a 4-way Lead.

Note: - M200 and M250 masters come already equipped with 2 auxiliary output circuits and as such the Auxiliary Output board is intended primarily for systems that are not fitted with a master.

- The relay contacts on an Auxiliary Output Board act as a switch and do not output any voltage on their own.

- For this feature to operate from all stations, the "AUX terminal at each station must be interconnected.

<u>WARNING</u>: This board is <u>not</u> designed to switch HIGH VOLTAGE directly. A separate suitable relay can be used in conjunction with this board where the switching of High Voltage is required.

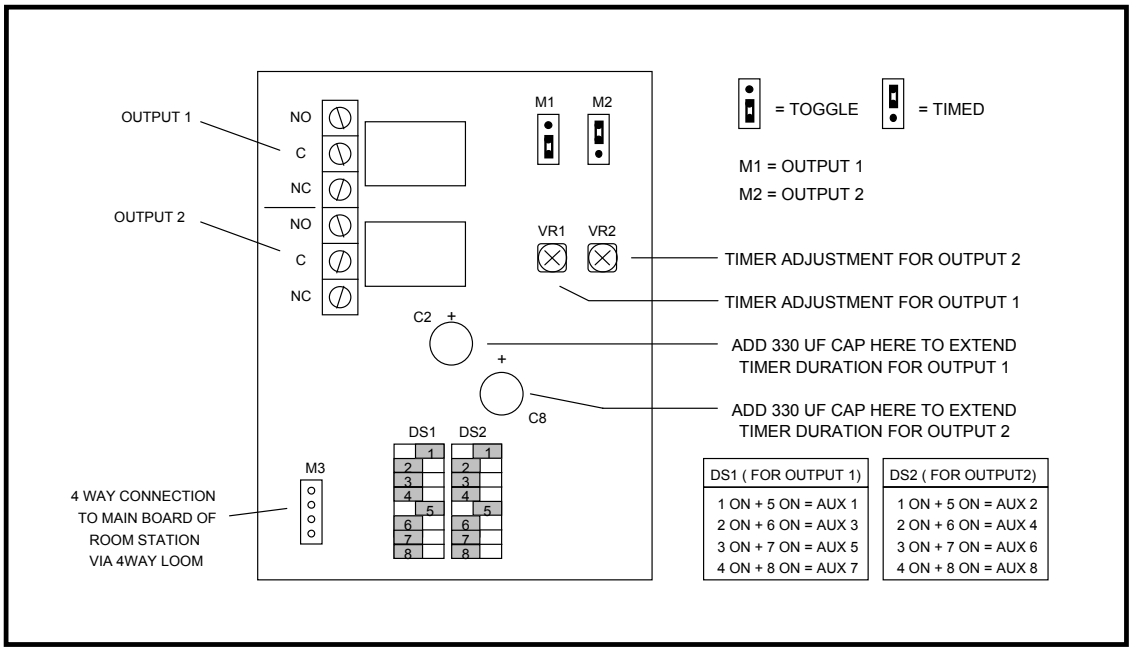

OPTIONAL DAB+ ANTENNA (106-909)

CONNECTIONS – Using RG6 Cable

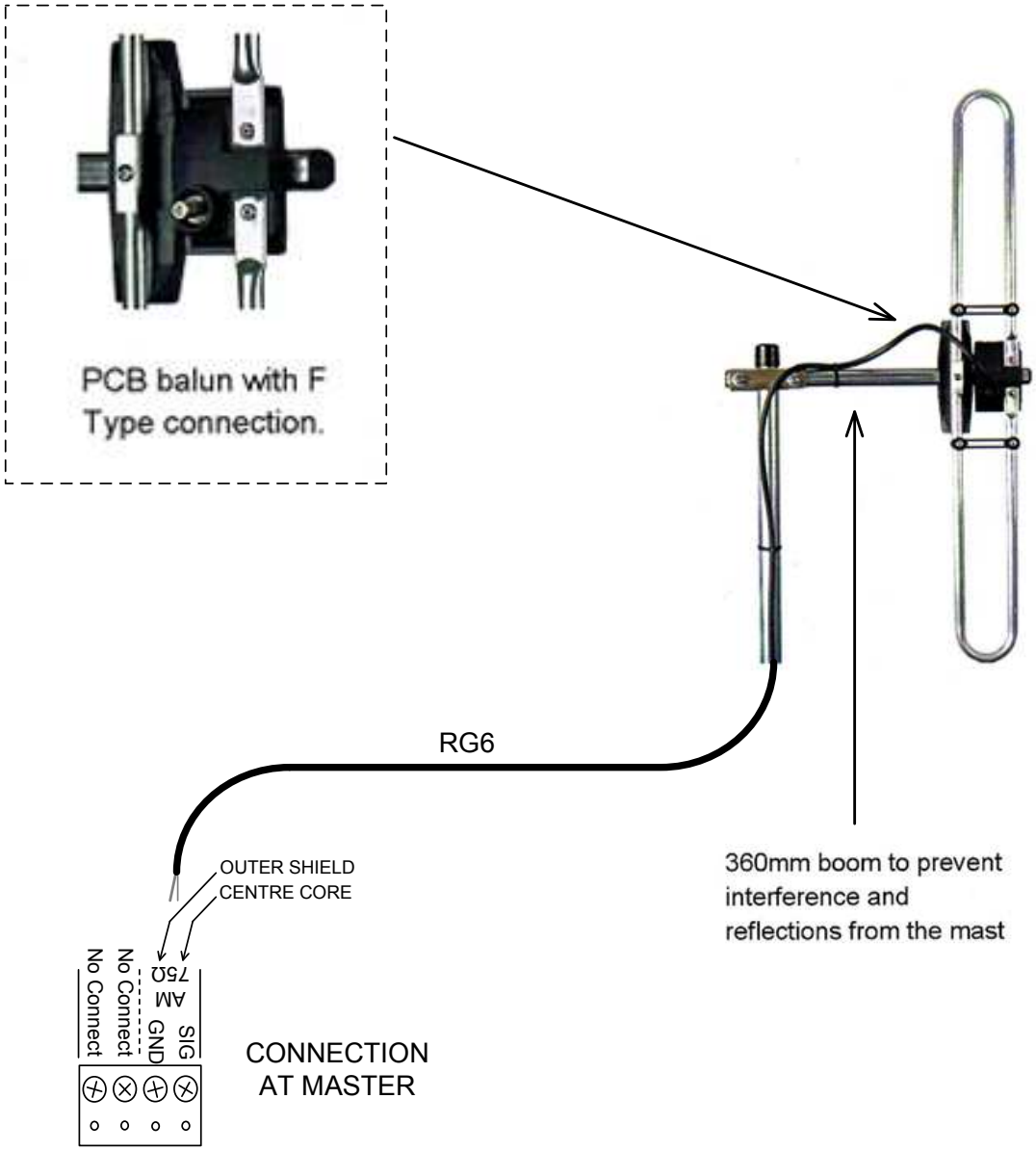

- The DAB antenna may be mounted in the roof space however mounting the antenna externally is recommended for best performance.
- For best DAB reception, the antenna would normally mounted vertically (straight up and down).
- RG6 Coax Cable should be used but RG59 is acceptable if it already exists.
- Connection of the coaxial cable to the antenna requires an F connector.
- Connecting the coaxial cable to the master is best done fitting a Male BNC connector at the end of the coax and then using one of our flexible BNC fly leads to connect to the antenna terminals on the master.
- If using crimp type BNC and F connectors, the correct crimping tools will be required.
- Screw-On F connectors and Crimpless BNC connectors are also available for RG6 (and RG59) cable.
- Ensure the connectors are the correct type for the cable being used (i.e. Suitable for RG6 or RG59 Cable)

iCentral™

Intelligent Central Systems

A DIVISION OF NESS CORPORATION